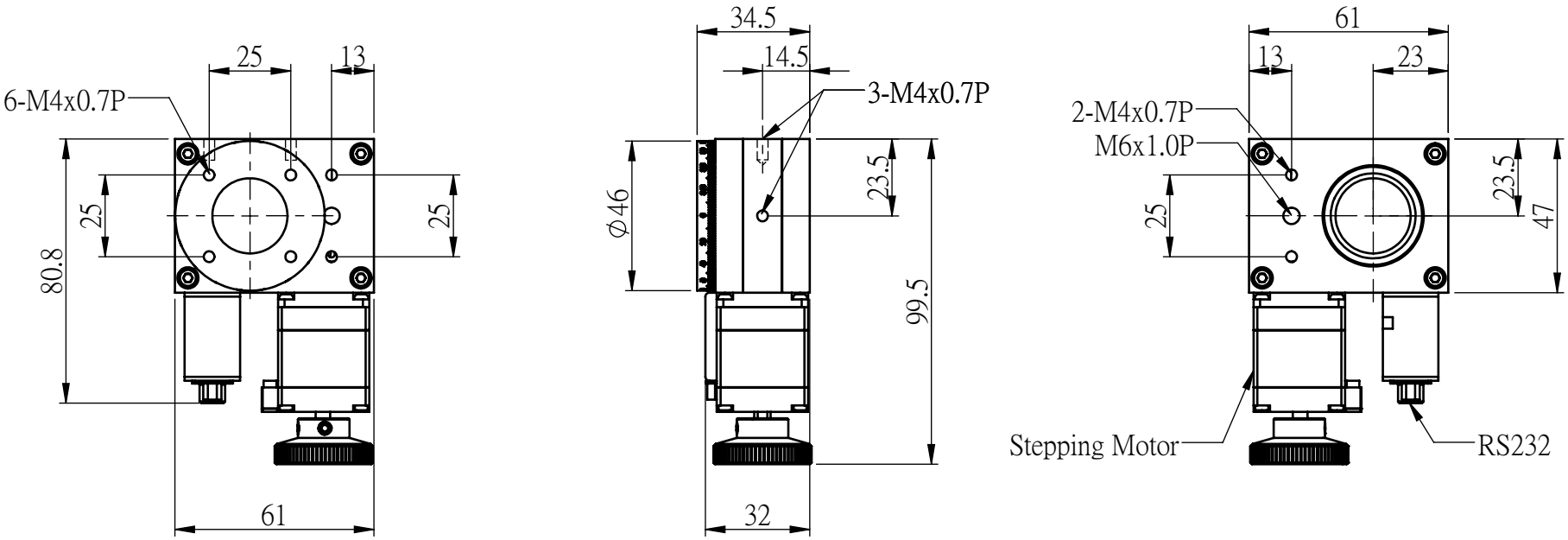
6-M4x0.7P
25
13
25
25
80.8
61
34.5
14.5
3-M4x0.7P
Ø46
23.5
99.5
32
61
13
23
2-M4x0.7P
M6x1.0P
25
23.5
47
Stepping Motor
RS232

MRH-46