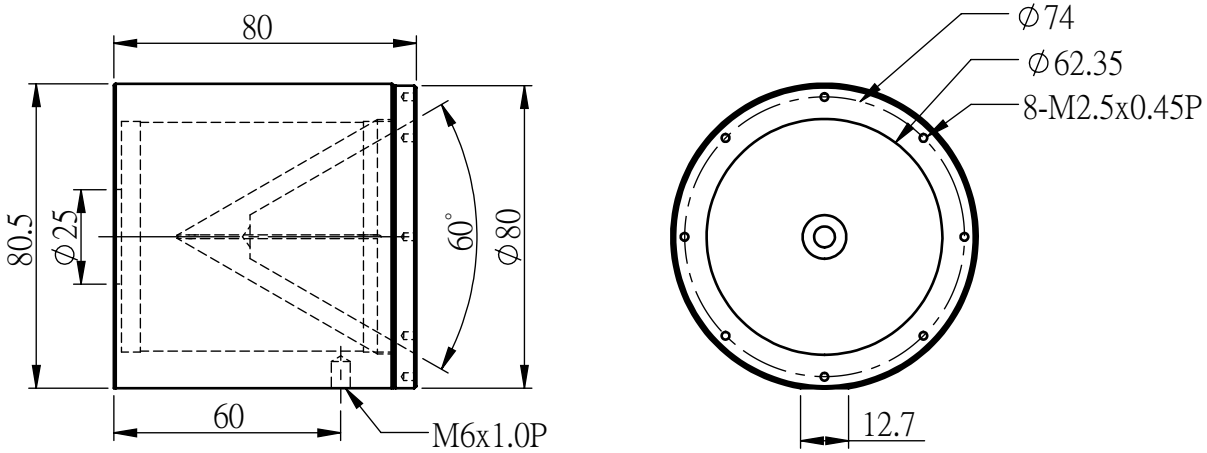

BD-80